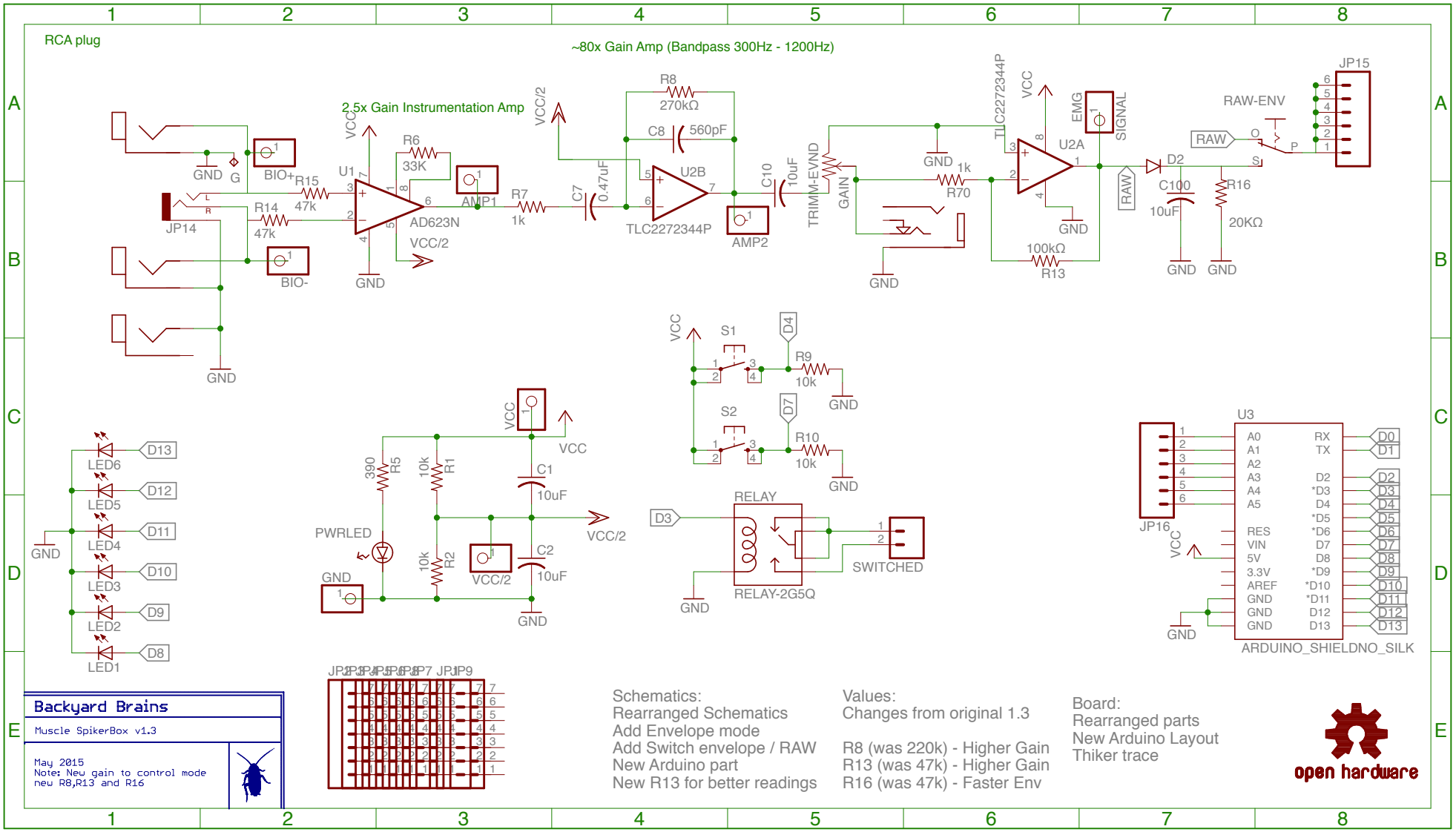
RCA plug
~80x Gain Amp (Bandpass 300Hz - 1200Hz)
2.5x Gain Instrumentation Amp
JP14
GND
G
BIO+
BIO-
R15
47k
R14
47k
U1
AD623N
VCC
VCC/2
R6
33K
AMP1
R7
1k
C7
0.47uF
R8
270kΩ
C8
560pF
U2B
TLC2272344P
AMP2
C10
10uF
TRIMM-EVND
GAIN
R70
1k
TLC2272344P
U2A
EMG
SIGNAL
R13
100kΩ
D2
C100
10uF
R16
20KΩ
RAW
RAW-ENV
JP15
S1
S2
D4
D7
R9
10k
R10
10k
LED1
LED2
LED3
LED4
LED5
LED6
D8
D9
D10
D11
D12
D13
PWRLED
390
R5
10k
R1
10k
R2
C1
10uF
C2
10uF
VCC/2
RELAY
RELAY-2G5Q
SWITCHED
D3
U3
JP16
ARDUINO_SHIELDNO_SILK
A0
A1
A2
A3
A4
A5
RES
VIN
5V
3.3V
AREF
GND
RX
TX
D2
*D3
D4
*D5
*D6
D7
D8
*D9
*D10
*D11
D12
D13
D0
D1
JP2 JP3 JP4 JP5 JP6 JP8 JP7 JP1 JP9
Backyard Brains
Muscle SpikerBox v1.3
May 2015
Note: New gain to control mode
new R8,R13 and R16
Schematics:
Rearranged Schematics
Add Envelope mode
Add Switch envelope / RAW
New Arduino part
New R13 for better readings
Values:
Changes from original 1.3
R8 (was 220k) - Higher Gain
R13 (was 47k) - Higher Gain
R16 (was 47k) - Faster Env
Board:
Rearranged parts
New Arduino Layout
Thiker trace
open hardware